Waterco pool pumps

Aquamite, Supastream, Supatuf

Aquamite
The Aquamite is an ideal pump for swimming pools and small recirculation systems including ponds and small water features.

Supastream
Supastream pumps are general purpose units designed for use in swimming pools and low pressure water recirculation applications

Supatuf
The Supatuf pump is ideal for large domestic swimming pools with ancillary systems such as heating, in-floor cleaning, fountains, vacuum cleaning and swim jets.

PROTECTED BY SECONDARY SEAL

3 YEAR WARRANTY

*conditions apply

WATERCO
Water, the liquid of life

www.waterco.com

Efficient Impeller and Diffuser Design

The pump's impeller and diffuser design maximizes the hydraulic output of the pump while minimizing turbulence. The pump's efficient hydraulic performance shortens run times and reduces energy consumption leading to lower operating costs.

Engineered Durability

The pump body is manufactured utilising state of the art engineering plastic moulding with a single piece strainer pot and volute for extra strength.

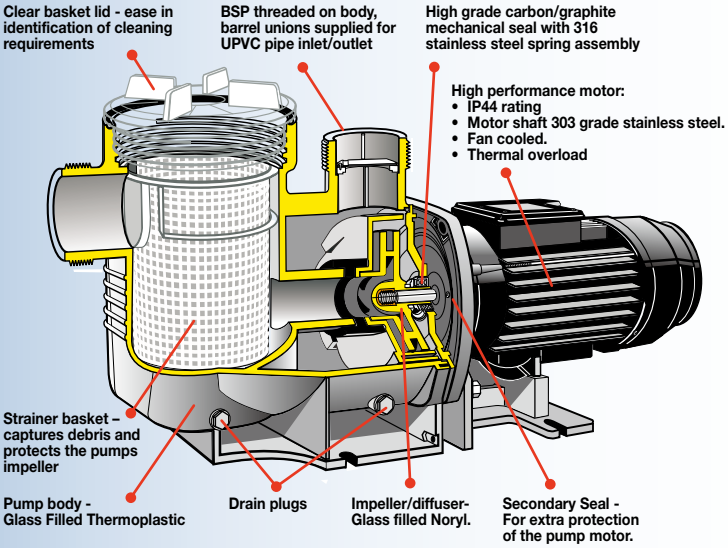

Waterco's Secondary Seal

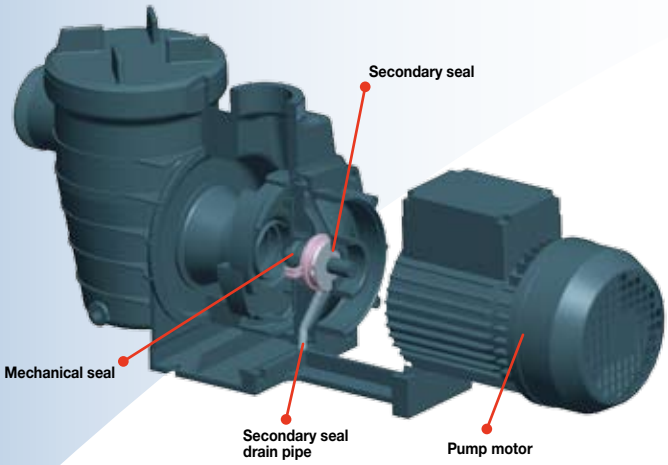

Situated between the pump wet end & the pump motor, a mechanical seal forms a seal around the motor shaft to prevent water from running out along the shaft of a motor. The mechanical seal is the wearing part of any pool pump.

A mechanical seal may leak water if the pump is ever run dry or simply be worn out. If a leaky mechanical seal is not replaced promptly, water will travel up the shaft of the motor and ruin the motor in a very short period of time.

Waterco's Pump Secondary Seal protects the pump motor end shield from any water contact, by capturing any leaks through a worn out mechanical seal and draining it out of the pump.

Aquamite

The Aquamite is an ideal pump for swimming pools and small recirculation systems including ponds and small water features.

Pump	Inlet / outlet	Strainer basket size
Aquamite	40mm	0.9

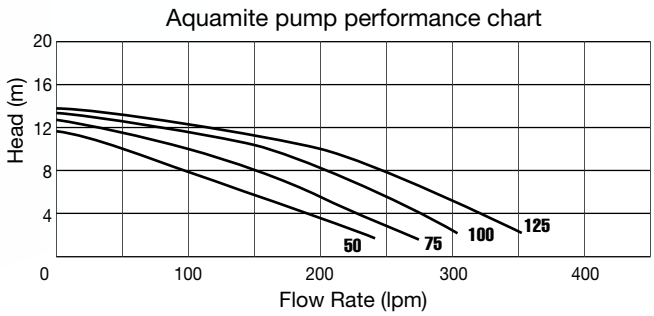

Model No.	Flow Rate (lpm)		Nom. HP	kW	Amps	Total Length	Motor Frame
	8m	10m					
2402050	112	61	0.50	0.58	2.50	497	63
2402075	156	99	0.75	0.65	3.00	497	63
2402100	197	147	1.00	0.76	3.33	497	63
2402125	252	208	1.25	0.88	3.90	497	63

Phase	Volts	Cycle	Rpm
1	220-240	50	2860

TOTAL LENGTH

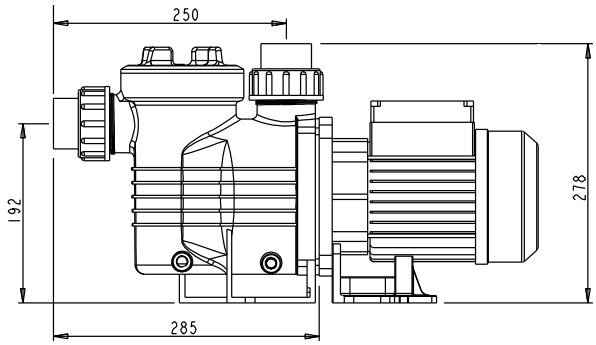

Supastream

Supastream pumps are general purpose units designed for use in swimming pools and low pressure water re-circulation applications

Pump	Inlet / outlet	Strainer basket size
Supastream	40mm	1.5

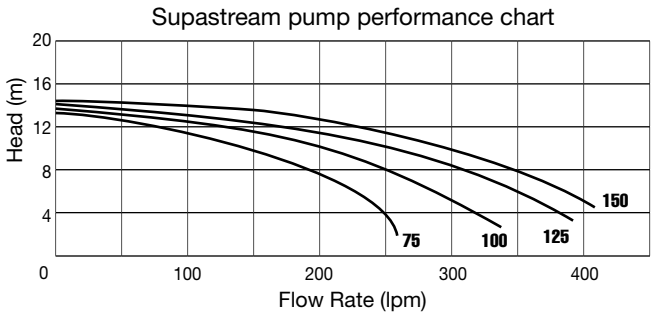

Model No.	Flow Rate (lpm)		Nom. HP	kW	Amps	Total Length	Motor Frame
	8m	10m					
2403075	190	154	0.75	0.61	2.80	536	63
24030100	251	205	1.00	0.82	3.60	559	71
24030125	295	241	1.25	0.88	3.90	559	71
24030150	332	272	1.50	1.09	4.90	580	83

Phase	Volts	Cycle	Rpm
1	220-240	50	2860

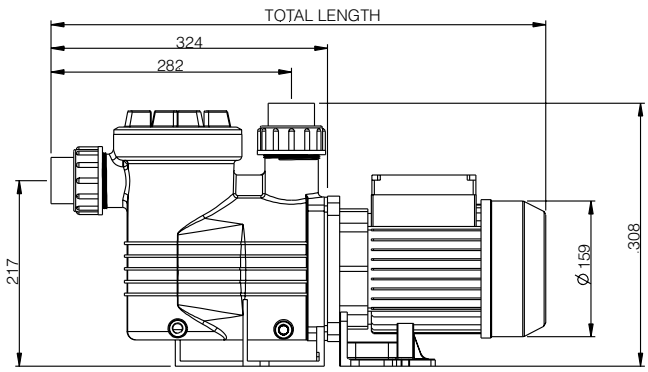

Supatuf

The Supatuf pump is ideal for large domestic swimming pools with ancillary systems such as heating, infloor cleaning, fountains, vacuum cleaning and swim jets.

Pump	Inlet / outlet	Strainer basket size
Supatuf	50mm	2.1

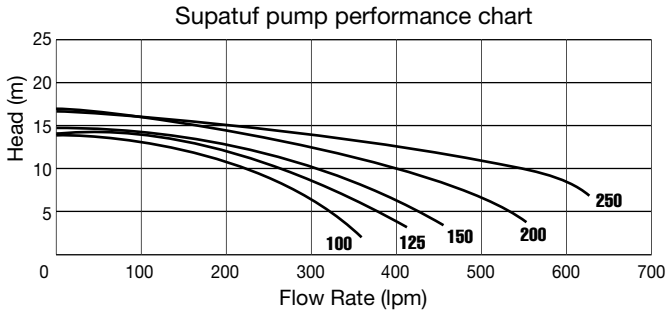

Model No.	Flow Rate (lpm)		Nom. HP	kW	Amps	Total Length	Motor Frame
	8m	10m					
241100	269	229	1.00	0.84	3.70	587	71
241125	309	265	1.25	0.96	4.20	587	71
241150	342	295	1.50	1.15	5.30	608	80
241200	442	380	2.00	1.50	7.20	629	80
241250	596	530	2.50	1.81	8.50	653	90

Phase	Volts	Cycle	Rpm
1	220-240	50	2860

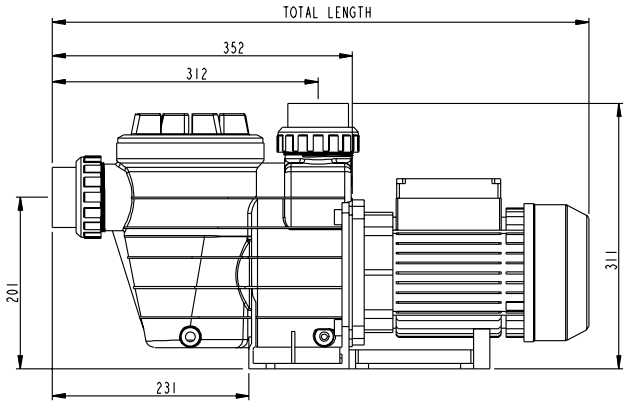

Warranty

Pumps	3 years (conditional)*
Wet End	3 years
Motor, mechanical seal, hair & lint pot lid, o'ring, basket, impeller & diffuser	2 years
Commercial applications	1 year
Labour	1 year

* Please refer to Waterco's warranty terms and conditions

Waterco Limited
Waterco is an Australian public listed company involved in the manufacture and distribution of:
- Pool and spa equipment
- Pool and spa chemicals
- Domestic water filter, softeners and purifiers
- Commercial water treatment equipment

Waterco exports to over 40 countries via branches operating in Australia, New Zealand, Malaysia, China, the United Kingdom, United States of America, Canada and Indonesia as well as through international distributors.

Aquamite, Supastream and Supatuf are registered trademarks of Waterco Limited.

OFFICES - AUSTRALIA
NSW - Sydney (Head Office)
Tel: +61 2 9898 8686
QLD - Brisbane
Tel: +61 7 3299 9900
VIC/TAS - Melbourne
Tel: +61 3 9764 1211
WA - Perth
Tel: +61 8 9273 1900
SA/NT - Adelaide
Tel: +61 8 8244 6000
ACT Distribution
Tel: +61 2 6280 6476

OFFICES - OVERSEAS
Waterco (Europe) Limited
Radfield, Kent, UK
Tel: +44 (0) 1795 521 733
Waterco USA (Baker Hydro)
Augusta, USA
Tel: +1 706 793 7291
Waterco Canada
Quebec, Canada
Tel: +1 450 796 4333
Waterco (NZ) Limited
Auckland, New Zealand
Tel: +64 9 525 7570

Waterco (GZ) Limited
Guangzhou, China
Tel: +86 20 3222 2180
Waterco (Far East) Sdn Bhd
Selangor, Malaysia
Tel: +60 3 6145 6000
PT Waterco Indonesia
Jakarta, Indonesia
Tel: +62 21 4585 1481

DISTRIBUTED BY:

WATERCO
Water, the liquid of life

APSP The Association of Pool & Spa Professionals

Member WATER QUALITY ASSOCIATION

ZZB1267 09/09

In the interest of providing better quality and value we are constantly improving and updating our products. Consequently, pictures and information on our brochures may sometimes vary slightly from models available.